Technische Universiteit
Eindhoven
University of Technology

Merging Alignments for Decomposed Replay

Eric Verbeek
Wil van der Aalst

Where innovation starts

- Preliminaries
  - Monolithical replay
  - Decomposed replay
- Merging alignments
  - Pseudo alignment
  - Alignment of alignments
  - Stitching rules
- Wrapping up
  - Conclusions
  - Future work

- Preliminaries
  - Monolithical replay
  - Decomposed replay
- Merging alignments
  - Pseudo alignment
  - Alignment of alignments
  - Stitching rules
- Wrapping up
  - Conclusions
  - Future work

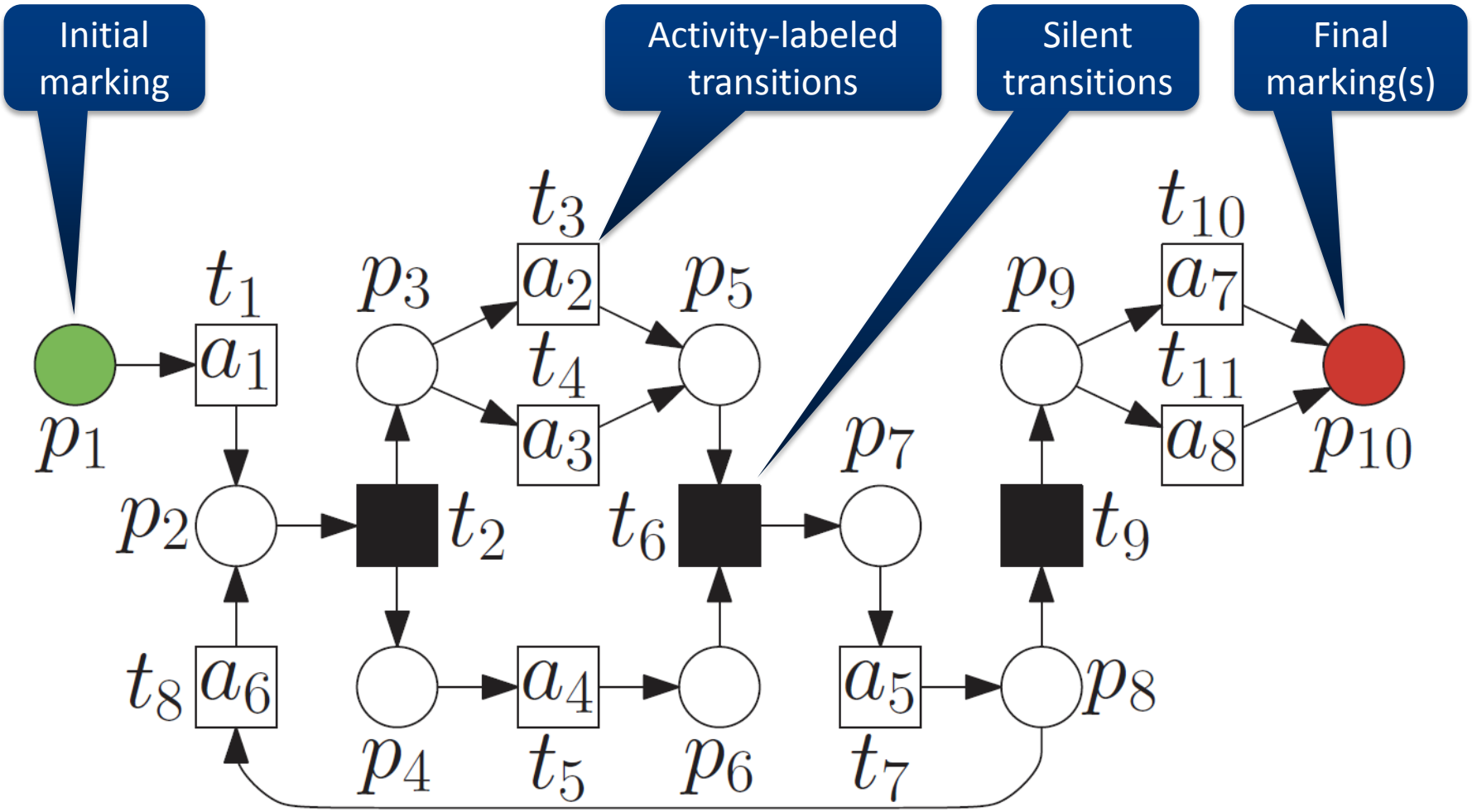
Initial marking
Activity-labeled transitions
Silent transitions
Final marking(s)
t_1
a_1
p_1
p_2
t_2
p_3
t_3
a_2
t_4
a_3
p_5
t_6
p_7
t_9
p_9
t_{10}
a_7
t_{11}
a_8
p_{10}
t_8
a_6
p_4
a_4
t_5
p_6
a_5
t_7
p_8

$$\langle a_1, a_2, a_3, a_4, a_5, a_6, a_7, a_8 \rangle$$

$$\langle a_1, a_2, a_3, a_4, a_5, a_6, a_7, a_8 \rangle$$

a_1
t_1
0

Match

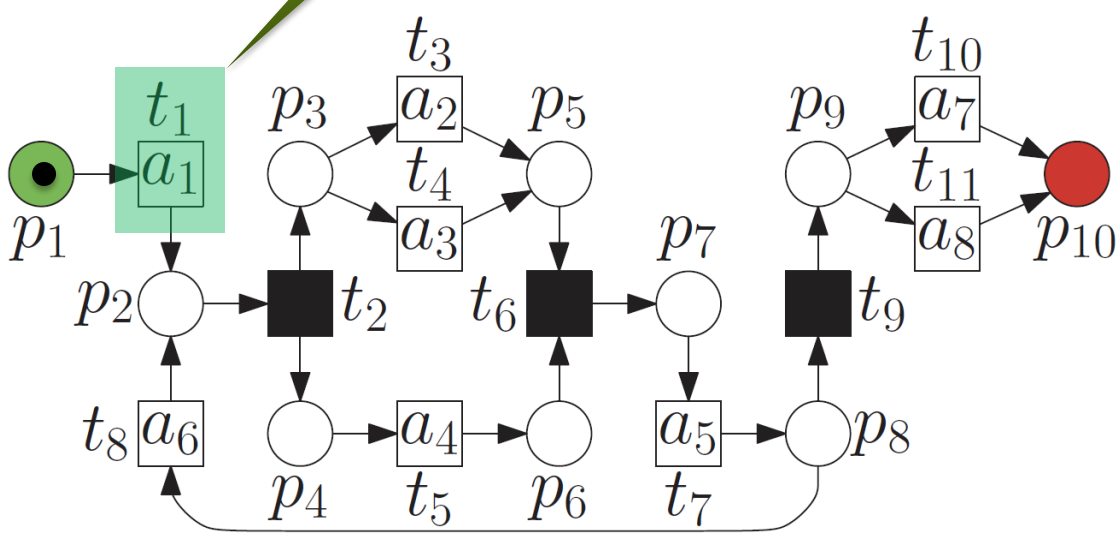

$$\langle a_1, a_2, a_3, a_4, a_5, a_6, a_7, a_8 \rangle$$

a_1	τ
t_1	t_2
0	0

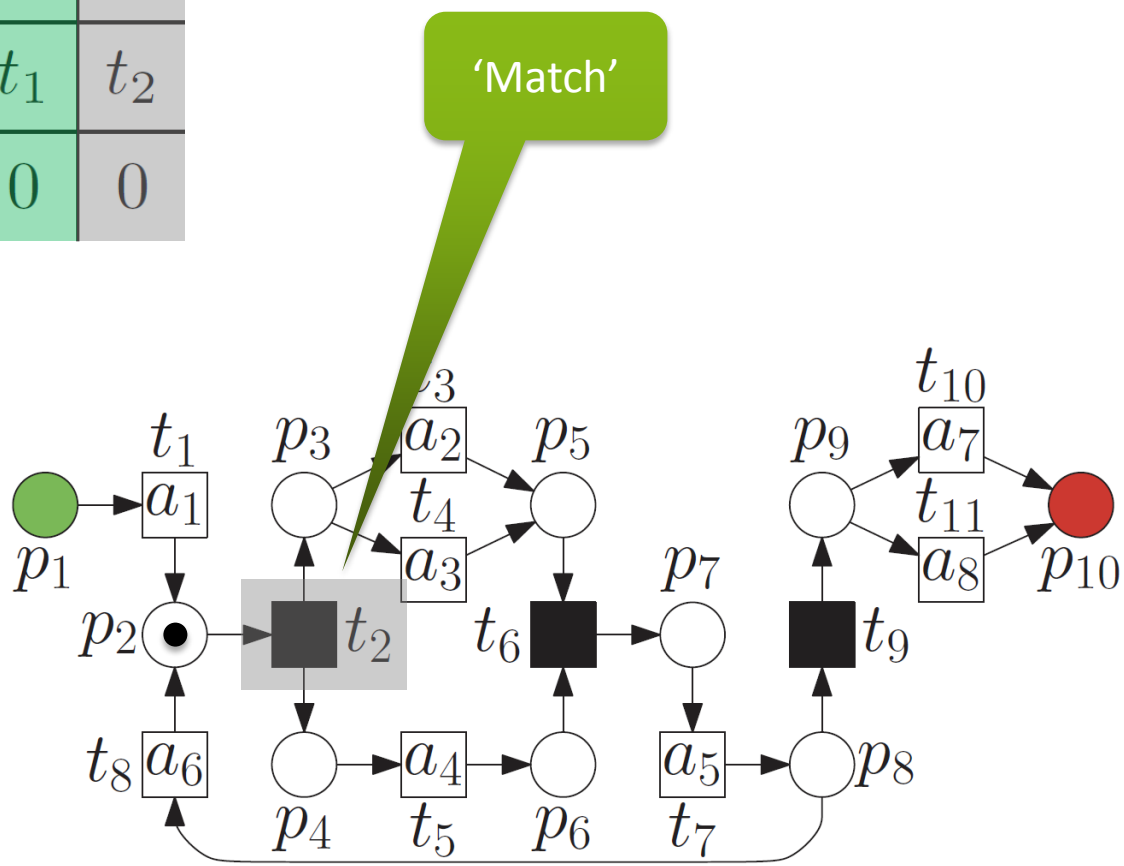

$$\langle a_1, a_2, a_3, a_4, a_5, a_6, a_7, a_8 \rangle$$

a_1	τ	a_2
t_1	t_2	t_3
0	0	0

Match

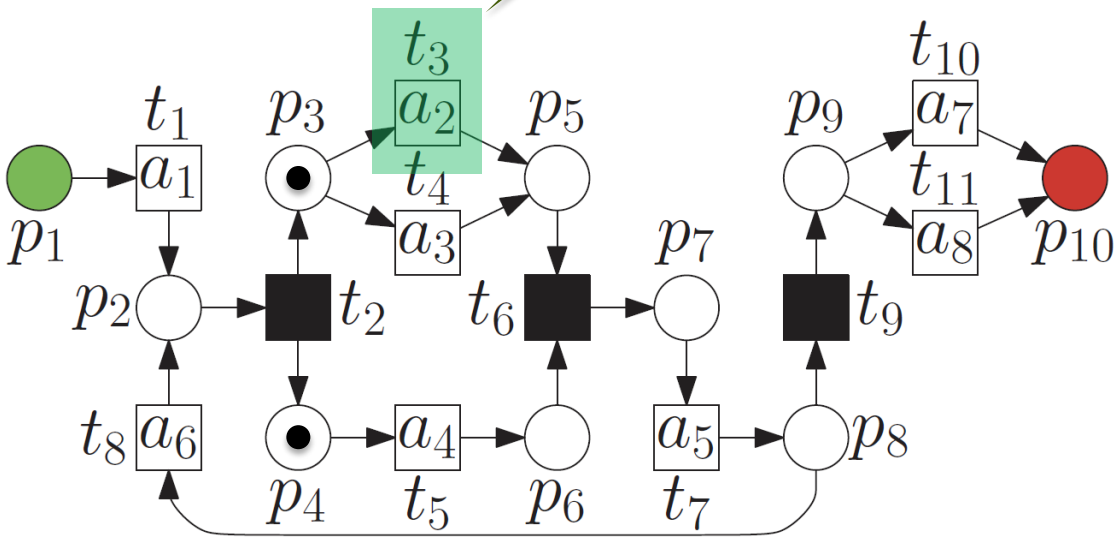

Synchronous move on a2 and t3

$$\langle a_1, a_2, a_3, a_4, a_5, a_6, a_7, a_8 \rangle$$

a_1	τ	a_2	a_3
t_1	t_2	t_3	$\gg$
0	0	0	10

No match

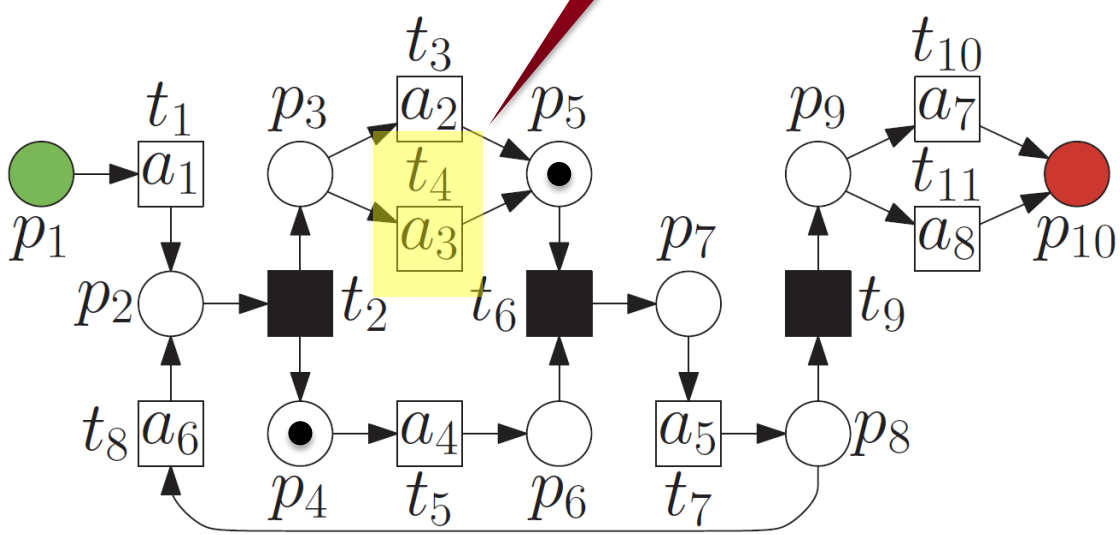

$$\langle a_1, a_2, a_3, a_4, a_5, a_6, a_7, a_8 \rangle$$

a_1	τ	a_2	a_3	a_4	τ	a_5	a_6	τ	a_7	a_8
t_1	t_2	t_3	$\gg$	t_5	t_6	t_7	$\gg$	t_9	t_{10}	$\gg$
0	0	0	10	0	0	0	10	0	0	10

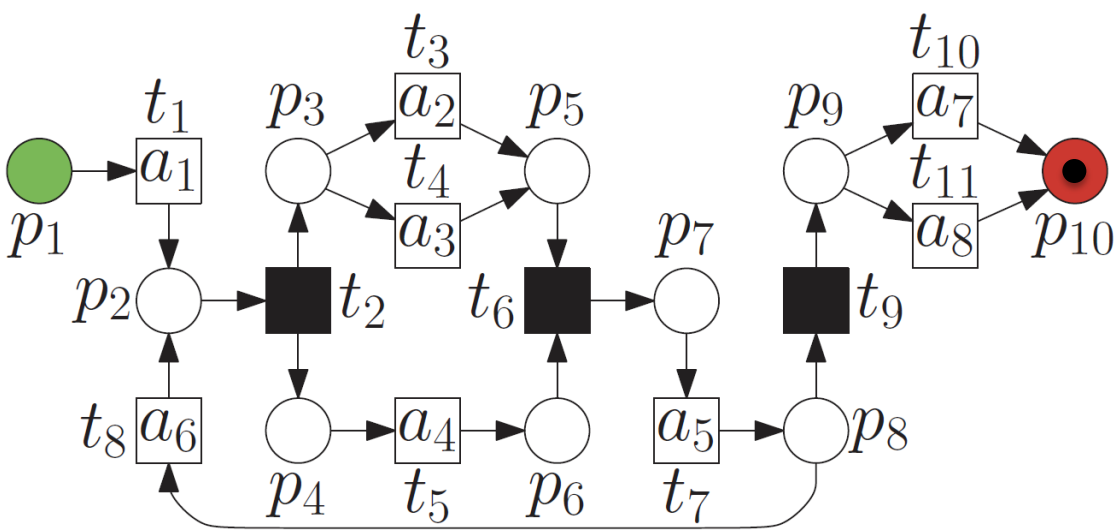

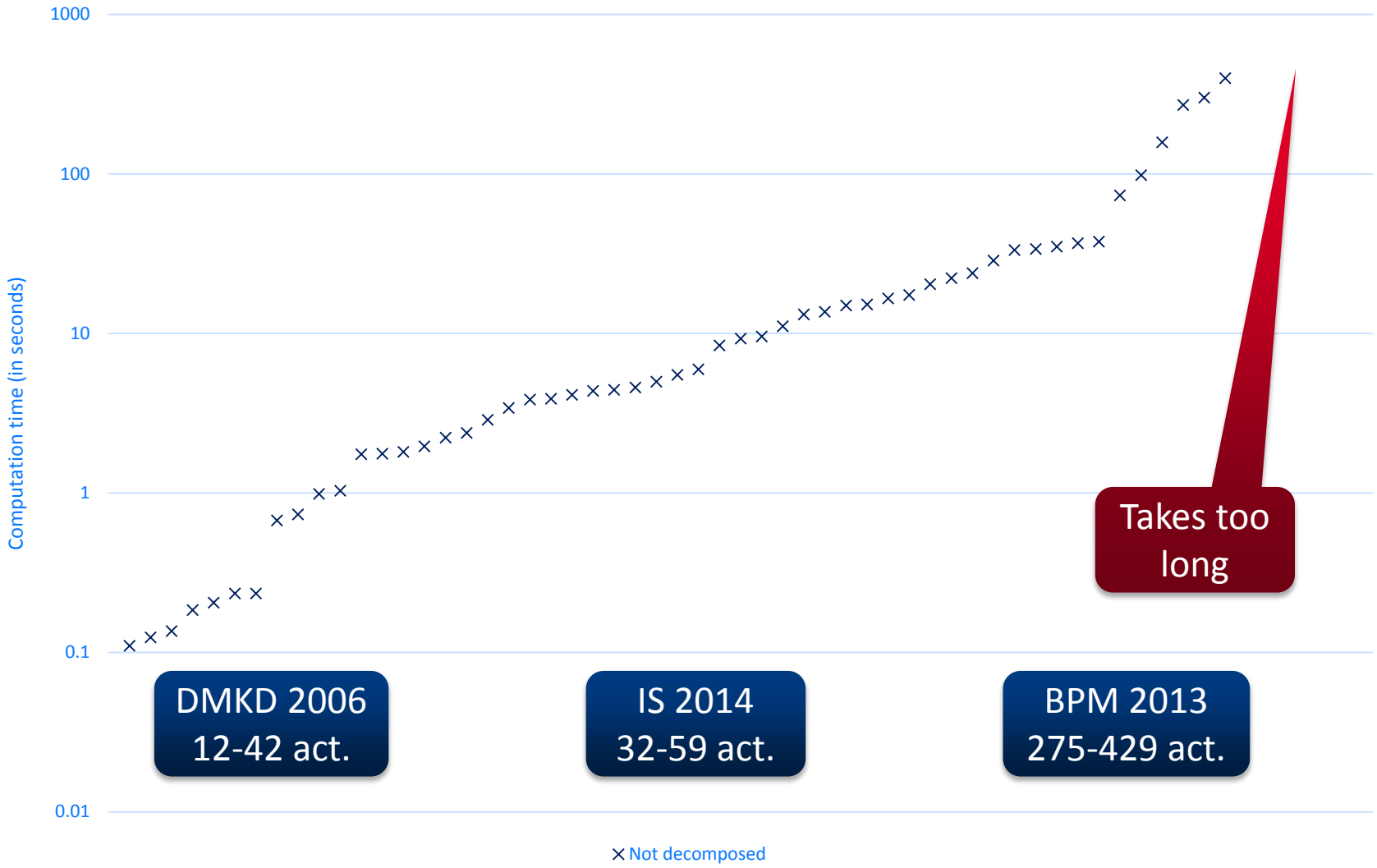

Computation times for replay

- Preliminaries
  - Monolithical replay
  - Decomposed replay
- Merging alignments
  - Pseudo alignment
  - Alignment of alignments
  - Stitching rules
- Wrapping up
  - Conclusions
  - Future work

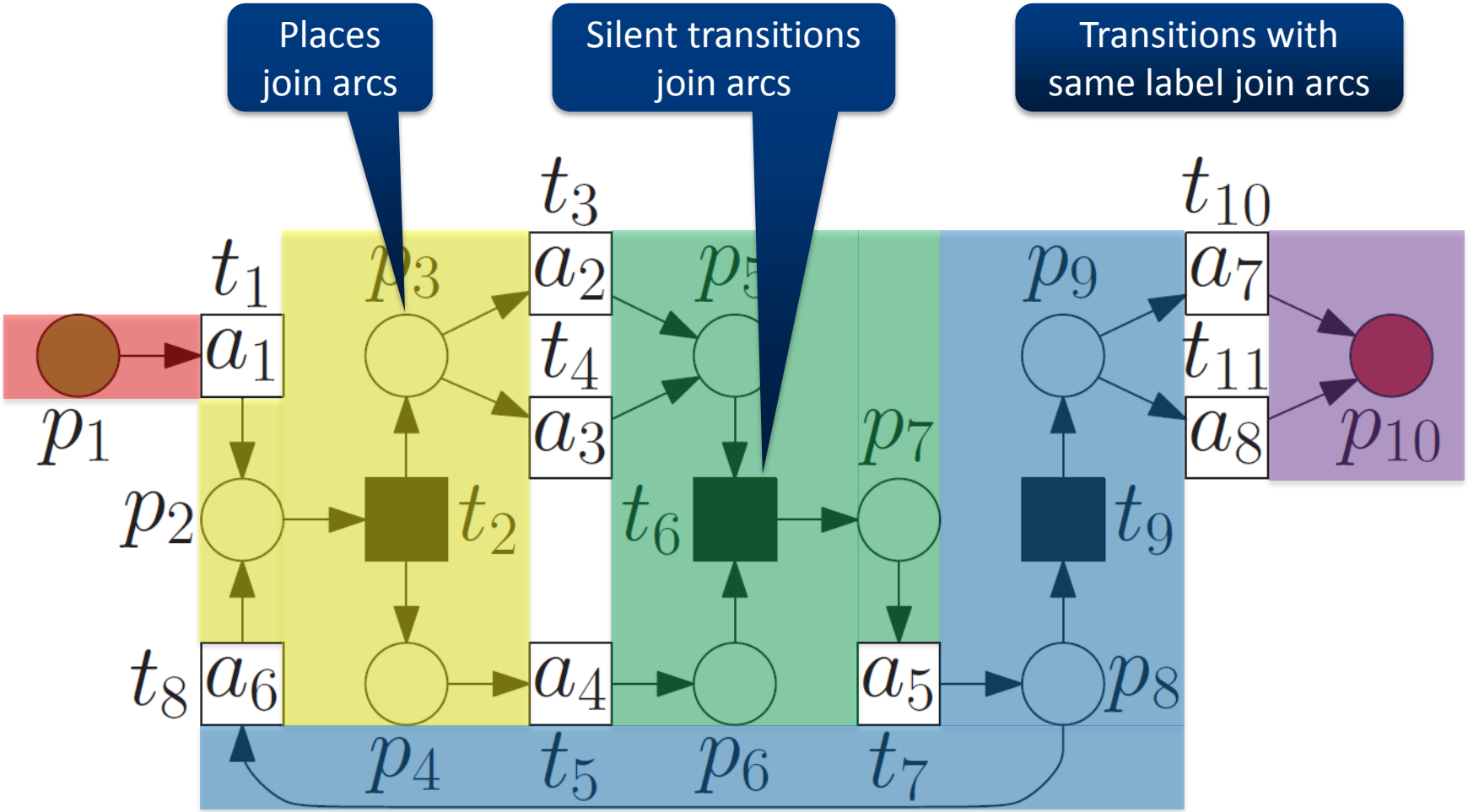
Places join arcs
Silent transitions join arcs
Transitions with same label join arcs
t_1
t_2
t_3
t_4
t_5
t_6
t_7
t_8
t_9
t_{10}
t_{11}
a_1
a_2
a_3
a_4
a_5
a_6
a_7
a_8
p_1
p_2
p_3
p_4
p_5
p_6
p_7
p_8
p_9
p_{10}

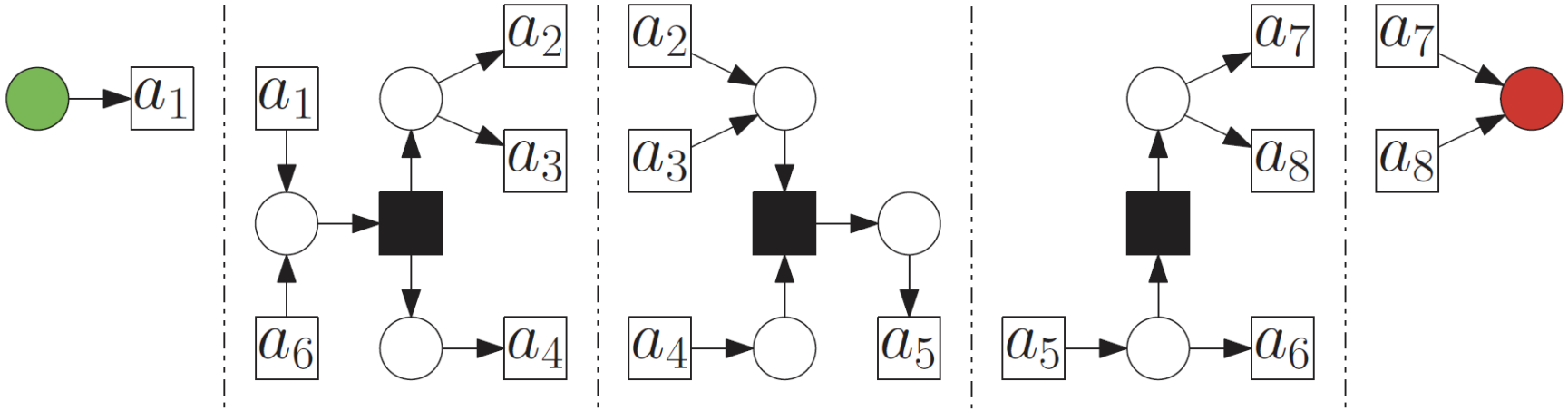
a_1
a_1
a_2
a_3
a_6
a_4
a_2
a_3
a_4
a_5
a_7
a_8
a_5
a_6
a_7
a_8

$$\langle a_1, a_2, a_3, a_4, a_6 \rangle$$

a_1	τ	a_2	a_3	a_4	a_6
t_1	t_2	t_3	$\gg$	t_5	$\gg$
0	0	0	5	0	5

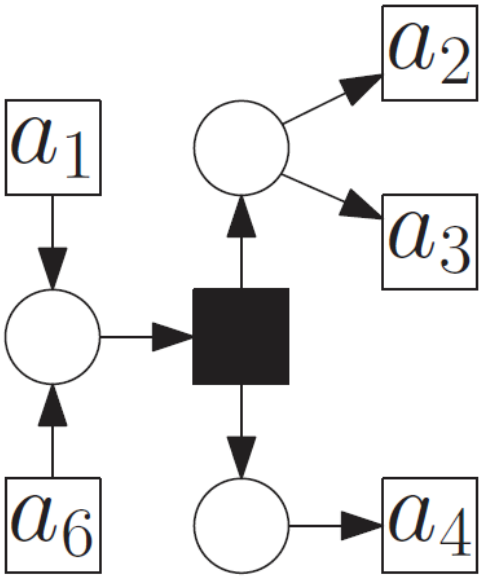

Adapted costs

a_1	a_2	a_3	a_4	τ	a_5	a_7	a_8
t_1	$\gg$	t_4	t_5	t_6	t_7	t_{10}	$\gg$
0	5	0	0	0	0	0	5

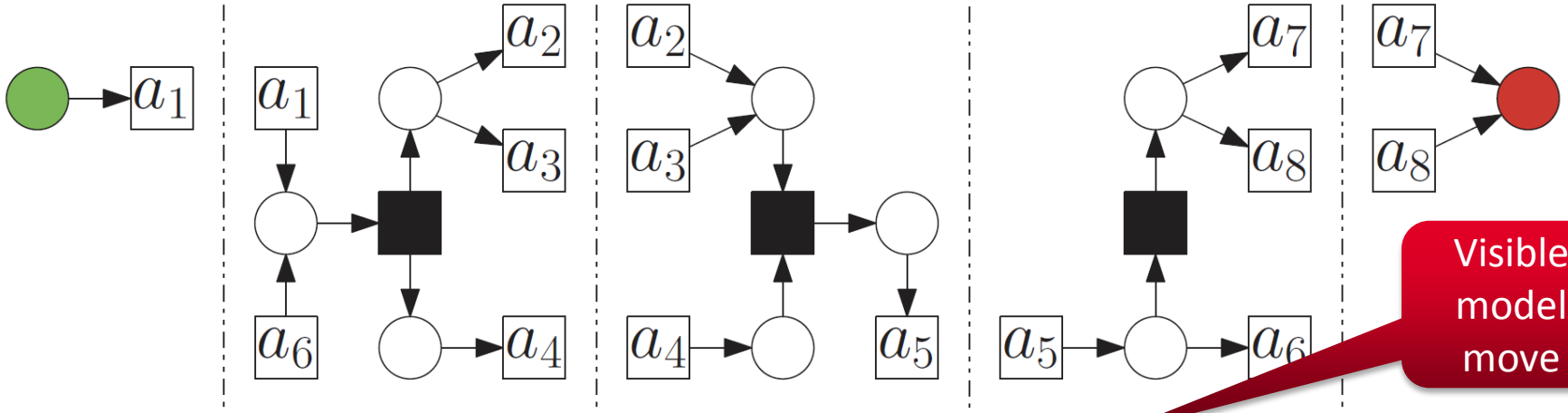

Visible model move

a_1	τ	a_2	a_3	a_4	a_6
t_1	t_2	t_3	$\gg$	t_5	$\gg$
0	0	0	5	0	5

a_5	a_6	$\gg$	τ	a_7	a_8
t_7	t_8	t_7	t_9	t_{10}	$\gg$
0	0	2	0	0	5

- Non-decomposed costs 0 if and only if decomposed costs 0
- Decomposed costs less or equal to non-decomposed costs

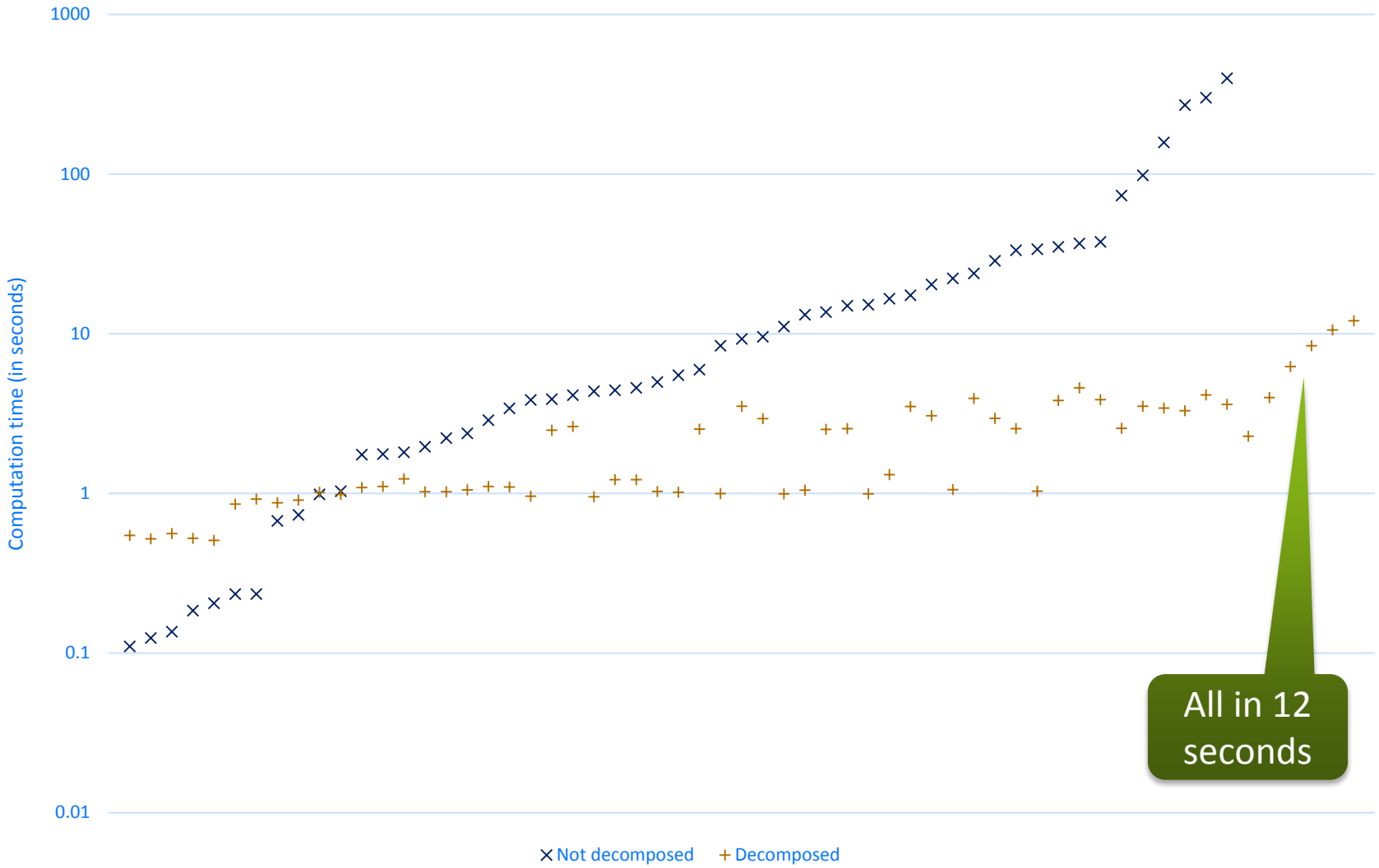

Computation times for replay

- Preliminaries
  - Monolithical replay
  - Decomposed replay
- Merging alignments
  - Pseudo-alignment
  - Alignment of alignments
  - Stitching rules
- Wrapping up
  - Conclusions
  - Future work

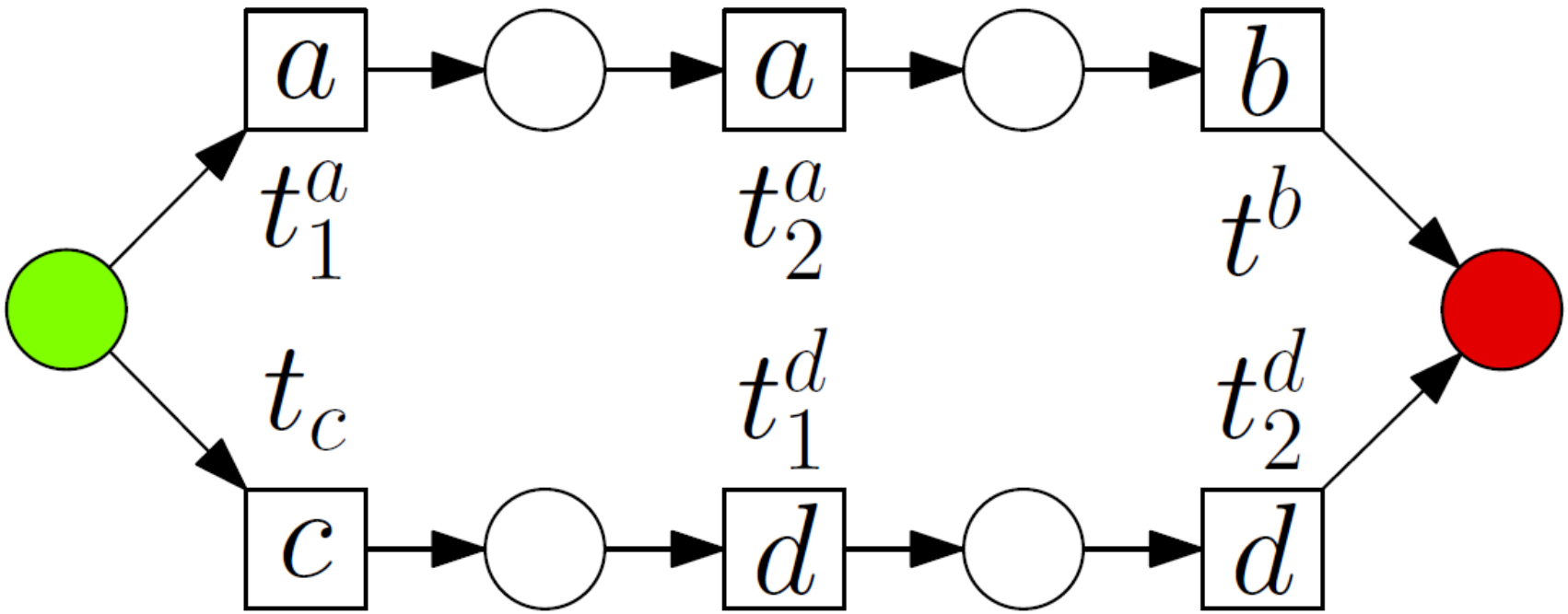
a
a
b
t_1^a
t_2^a
t^b
t_c
t_1^d
t_2^d
c
d
d

Transitions with same label join arcs

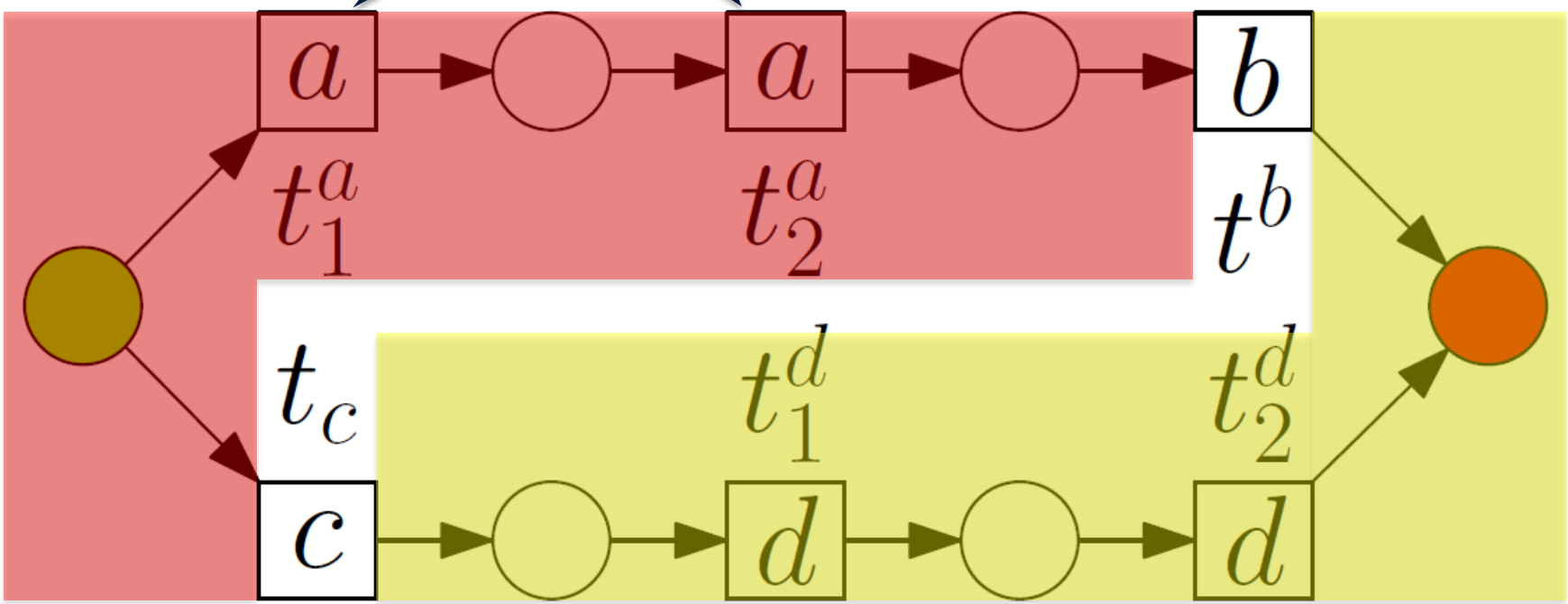

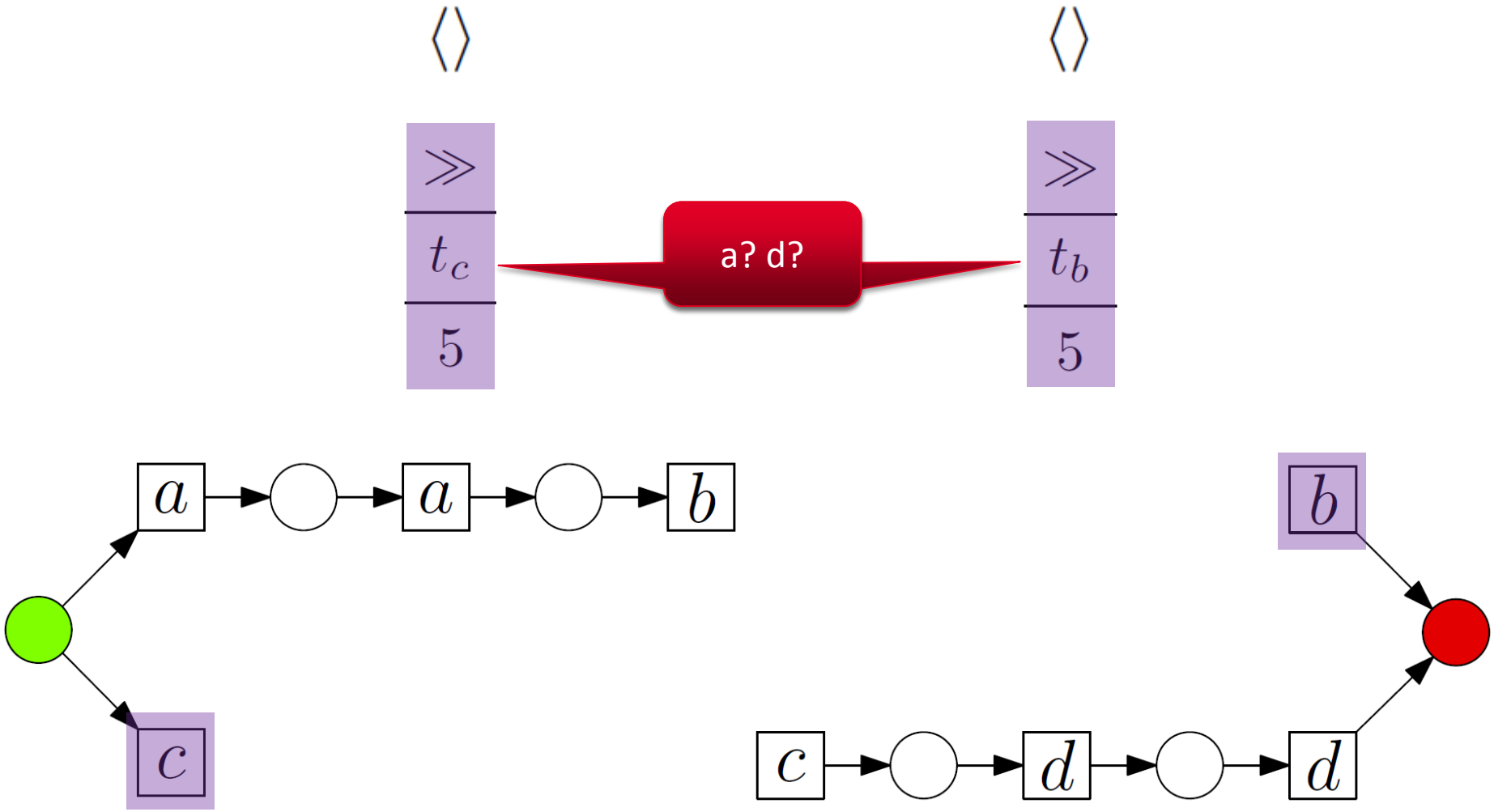
⟨⟩
⟨⟩
≫
t_c
5
a? d?
≫
t_b
5
a
a
b
c
b
c
d
d

- Preliminaries
  - Monolithical replay
  - Decomposed replay
- Merging alignments
  - Pseudo alignment
  - Alignment of alignments
  - Stitching rules
- Wrapping up
  - Conclusions
  - Future work

a_1 a_2 a_3 a_4 a_5 a_6 a_7 a_8

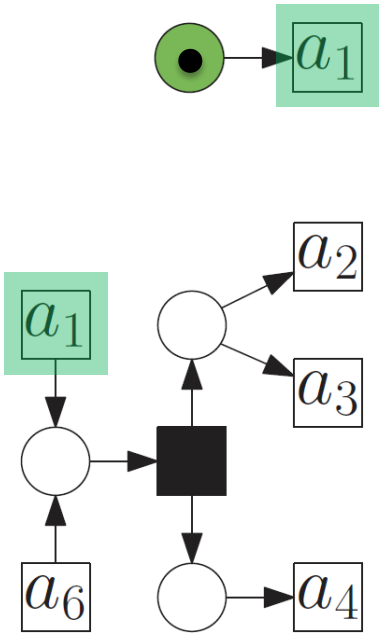

a_1	
t_1	
0	

a_1	
t_1	
0	

Synchronous moves: Match

a_1	
t_1	
0	

Alignment

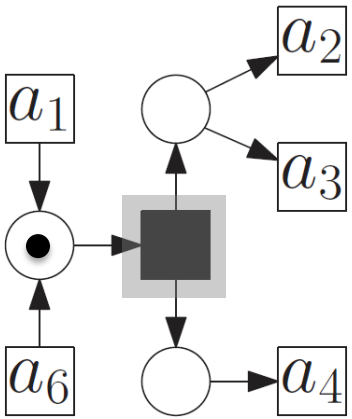

a_1	a_2	a_3	a_4	a_5	a_6	a_7	a_8
a_1							
t_1							
0							
a_1	τ						
t_1	t_2						
0	0						
a_1	τ						
t_1	t_2						
0	0						

Invisible model move: Match

Alignment

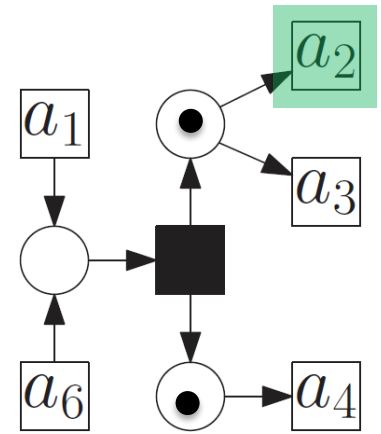

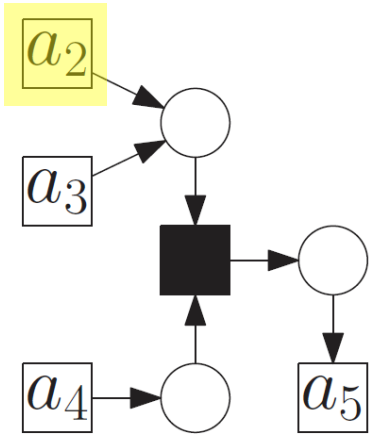

a_1	a_2	a_3	a_4	a_5	a_6	a_7	a_8
a_1							
t_1							
0							
a_1	τ	a_2					
t_1	t_2	t_3					
0	0	0					
		a_2					
		$\gg$					
		5					
a_1	τ	a_2					
t_1	t_2	$\gg$					
0	0	5					

Synchronous move vs log move: No match

Pseudo-alignment

a_1 a_2 a_3 a_4 a_5 a_6 a_7 a_8

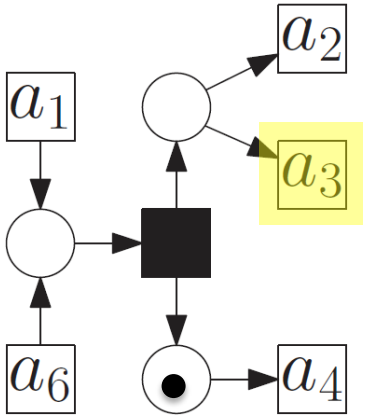

a_1			
t_1			
0			

a_1	τ	a_2	a_3
t_1	t_2	t_3	$\gg$
0	0	0	5

a_2	a_3
$\gg$	t_4
5	0

Synchronous move vs log move: No match

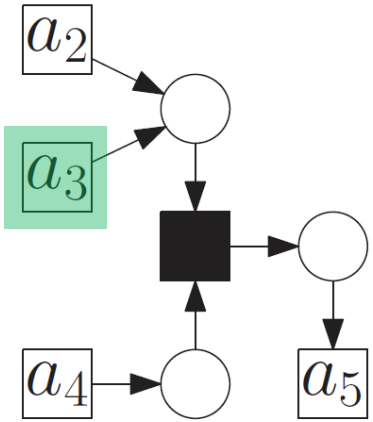

a_1	τ	a_2	a_3
t_1	t_2	$\gg$	$\gg$
0	0	5	5

Pseudo-alignment

a_1		a_2	a_3	a_4		a_5	a_6			a_7	a_8
a_1						a_5	a_6	$\gg$	τ	a_7	a_8
t_1						t_7	t_8	t_7	t_9	t_{10}	$\gg$
0						0	0	2	0	0	5
a_1	τ	a_2	a_3	a_4			a_6			a_7	a_8
t_1	t_2	t_3	$\gg$	t_5			$\gg$			t_{10}	$\gg$
0	0	0	5	0			5			0	5
		a_2	a_3	a_4	τ	a_5					
		$\gg$	t_4	t_5	t_6	t_7		$\cancel{t_7}$			
		5	0	0	0	0					

a_1	τ	a_2	a_3	a_4	τ	a_5	a_6	$\gg$	τ	a_7	a_8
t_1	t_2	$\gg$	$\gg$	t_5	t_6	t_7	$\gg$	t_7	t_9	t_{10}	$\gg$
0	0	5	5	0	0	0	5	2	0	0	10

Pseudo-alignment

- Preliminaries
  - Monolithical replay
  - Decomposed replay
- Merging alignments
  - Pseudo alignment
  - Alignment of alignments
  - Stitching rules
- Wrapping up
  - Conclusions
  - Future work

1. All done

2. Activity without conflict
   - All agree on next synchronous or log move
3. Transition without conflict
   - All agree on next visible model move or invisible model move

Alignment

4. Activity with conflict
   - Guided by trace, so no confusion what the next activity is
   - Take a most expensive move
5. Transition with conflict
   - No guidance possible, multiple transitions are possible
   - Take a most expensive move

Pseudo-alignment

- Alignment if costs 0
  - That is, if perfect match

- Costs 0: No conflicts
  - Synchronous moves
    - ‘Interface’ activity
      - Unique transition
    - ‘Shared’ activity
      - Unique subnet
  - Invisible model moves
    - Unique subnet

Alignment

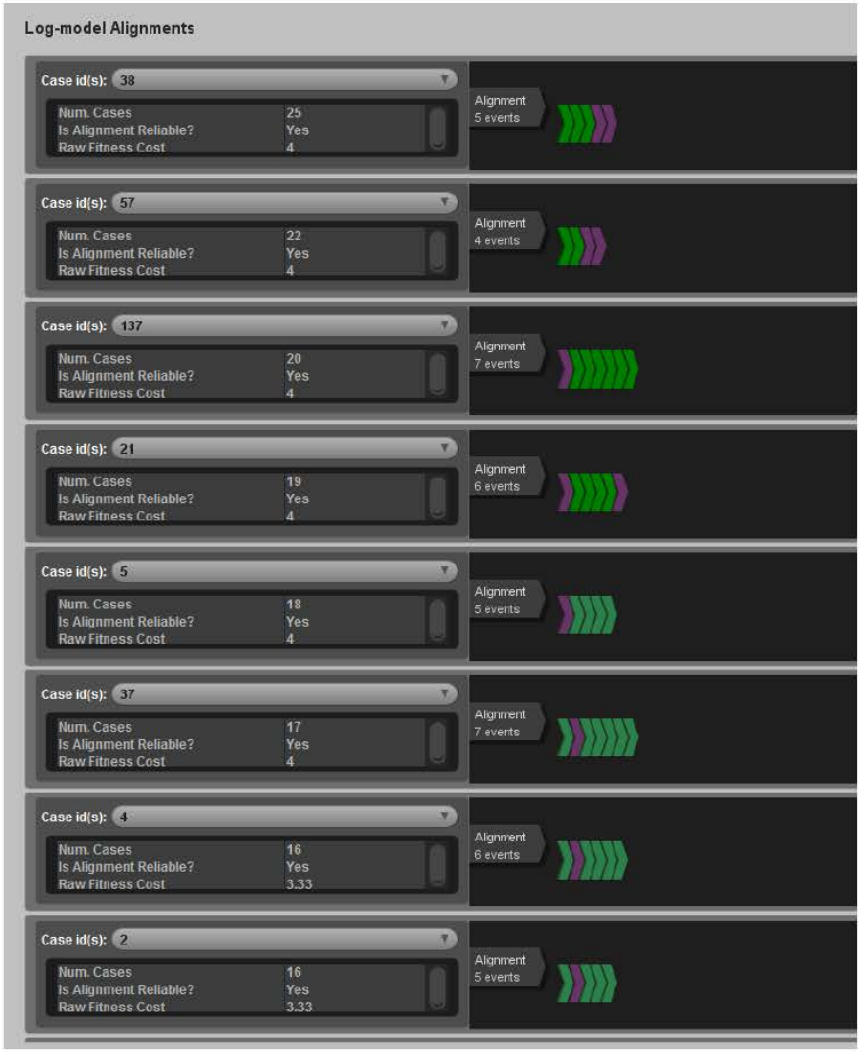

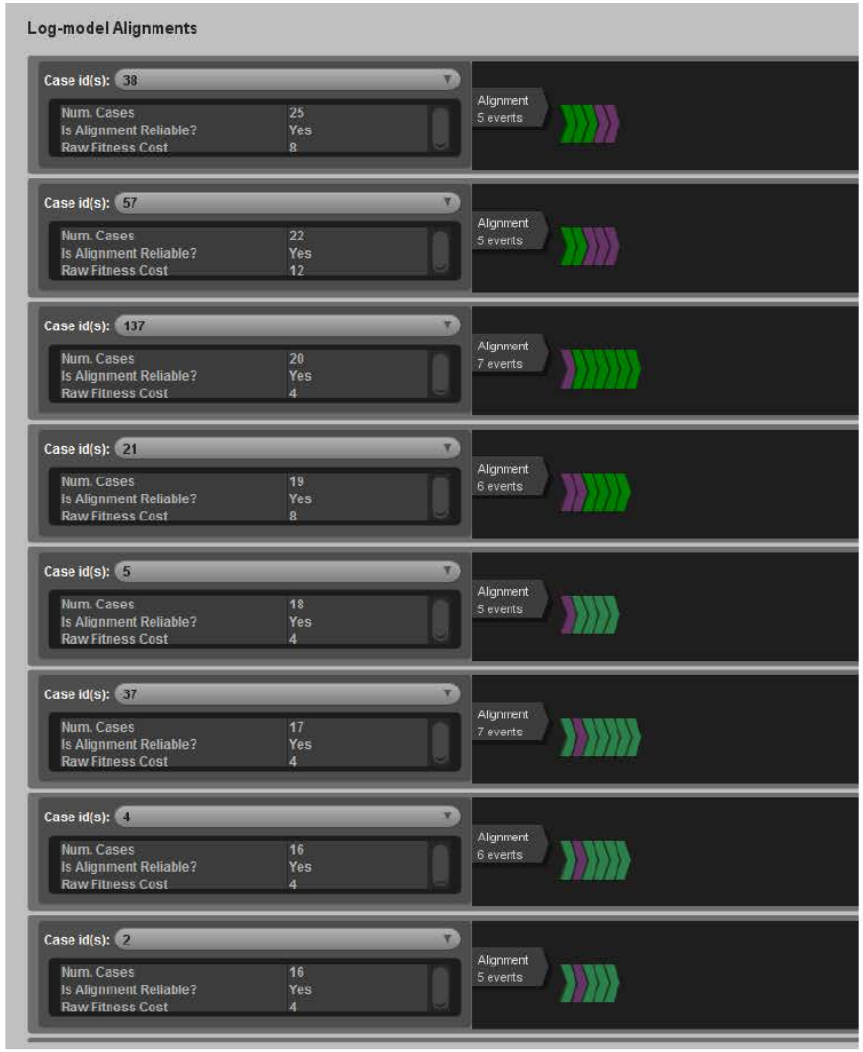

Implemented in ProM 6, integrated into decomposed replayer

- Preliminaries
  - Monolithical replay
  - Decomposed replay
- Merging alignments
  - Pseudo alignment
  - Alignment of alignments
  - Stitching rules
- Wrapping up
  - Conclusions
  - Future work

- Alignment
  - If costs 0
  - If possible
- Pseudo-alignment
  - Otherwise
- Decomposed replay
  - Includes alignment merge
  - Faster than non-decomposed replay

The Process Mining Toolkit

ProM

Revision 28643

6.6

/ Wil van der Aalst / Peter van den Brand / Massimiliano de Leoni / Boudewijn van Dongen / Dirk Fahland / Christian Gűnther / Bart Hompes / Maikel Leemans / Sander Leemans / Xixi Lu / Felix Mannhardt / Eric Verbeek / Michael Westergaard

TU/e Technische Universiteit Eindhoven University of Technology

Where innovation starts

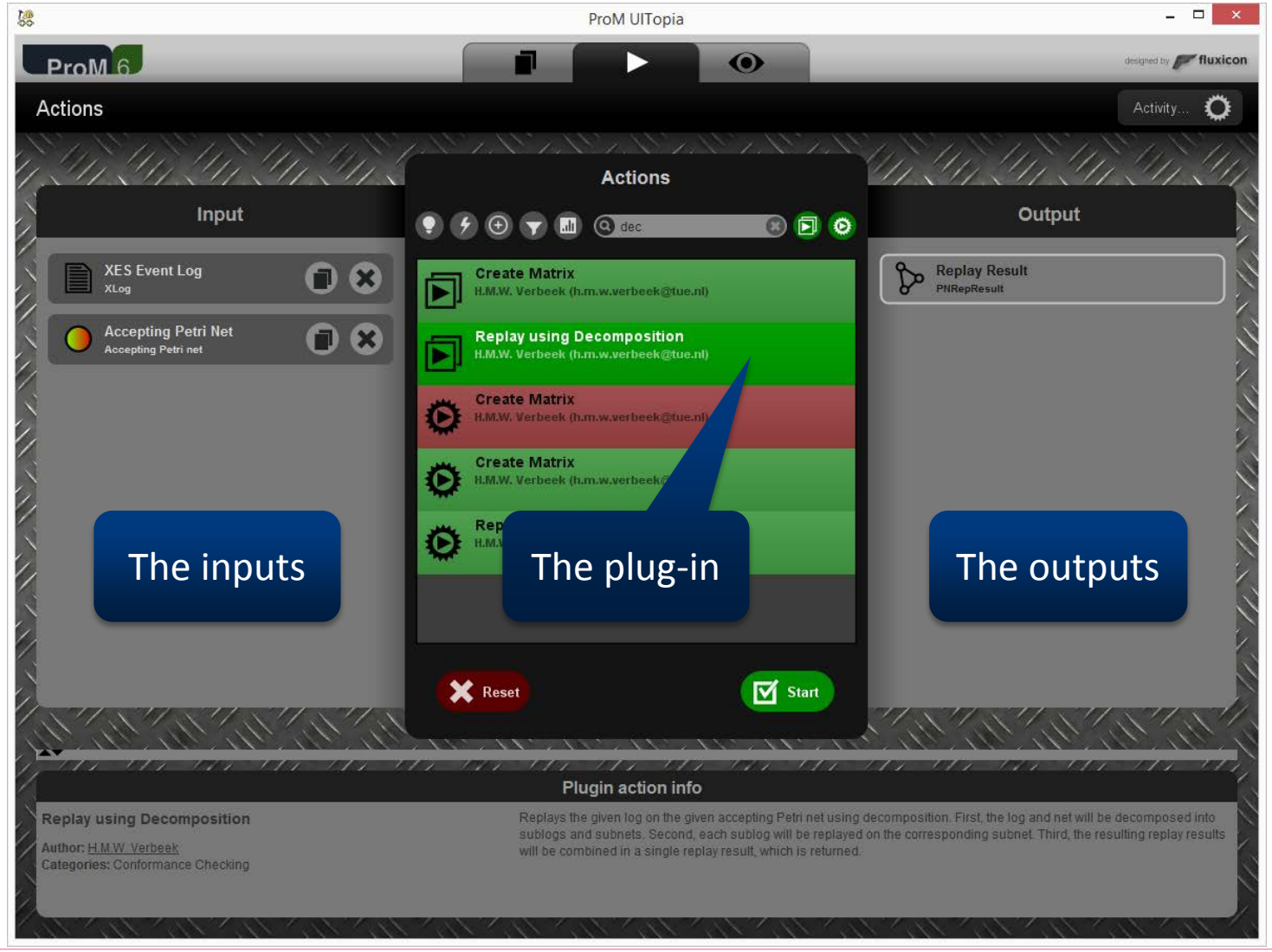
ProM UITopia
ProM 6
designed by fluxicon
Actions
Activity...
Input
XES Event Log
XLog
Accepting Petri Net
Accepting Petri net
Actions
dec
Create Matrix
H.M.W. Verbeek (h.m.w.verbeek@tue.nl)
Replay using Decomposition
H.M.W. Verbeek (h.m.w.verbeek@tue.nl)
Create Matrix
H.M.W. Verbeek (h.m.w.verbeek@tue.nl)
Create Matrix
Reset
Start
Output
Replay Result
PNRepResult
The inputs
The plug-in
The outputs
Plugin action info
Replay using Decomposition
Author: H.M.W. Verbeek
Categories: Conformance Checking
Replays the given log on the given accepting Petri net using decomposition. First, the log and net will be decomposed into sublogs and subnets. Second, each sublog will be replayed on the corresponding subnet. Third, the resulting replay results will be combined in a single replay result, which is returned.

- Preliminaries
  - Monolithical replay
  - Decomposed replay
- Merging alignments
  - Pseudo alignment
  - Alignment of alignments
  - Stitching rules
- Wrapping up
  - Conclusions
  - Future work

- Reduction of pseudo-alignments
  - Replayer
    - Now returns a best alignment
    - Might return the set of best alignments
    - Reconsider alignment merge
      - Which best alignments to use?
  - No guarantee
    - See example shown earlier
- Optimization
  - Choice if visible transition moves conflict
  - Now we take one with maximal support:
    - We prefer 2 out of 3 over 1 out of 2

Questions?